REV.	DESCRIPTION	DATE

THESE DRAWINGS ARE THE PROPERTY OF *Thermaltake CO.,LTD.* AND CONTAINS CONFIDENTIAL AND TRADE SECRET INFORMATION.AND SHALL NOT BE REPRODUCED. COPIED OR USED IN ANY MANNER WITHOUT THE PRIOR WRITTER CONSENT OF *Thermaltake CO.,LTD.*

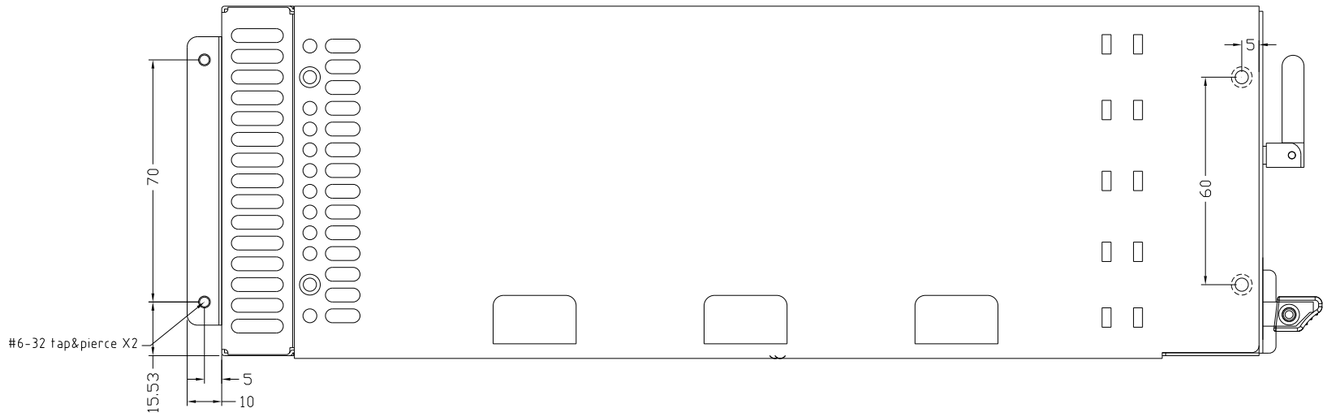

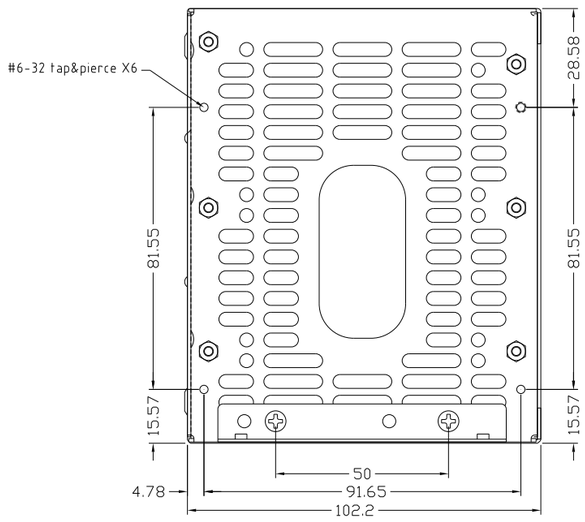

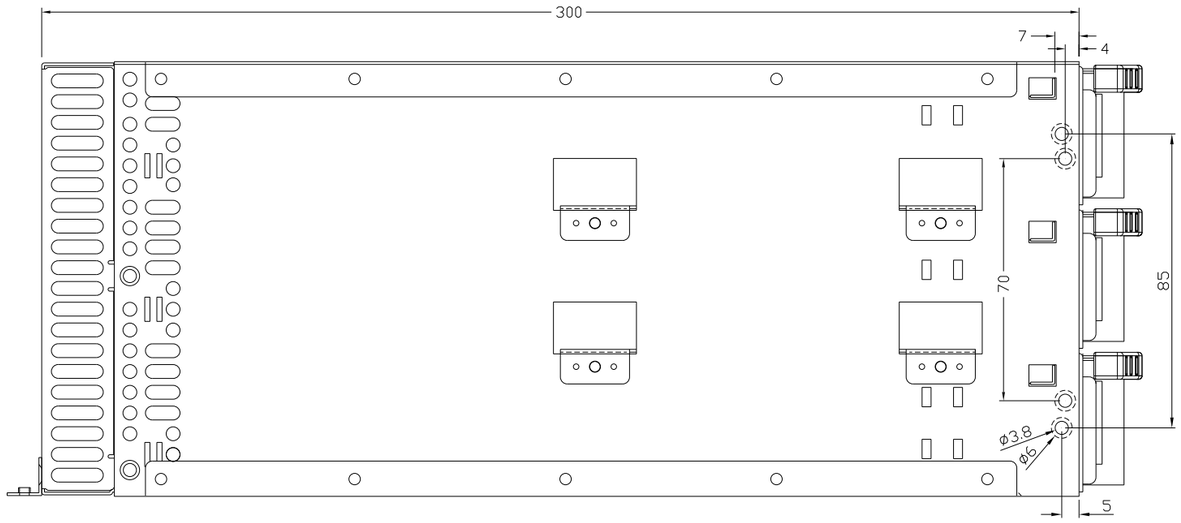

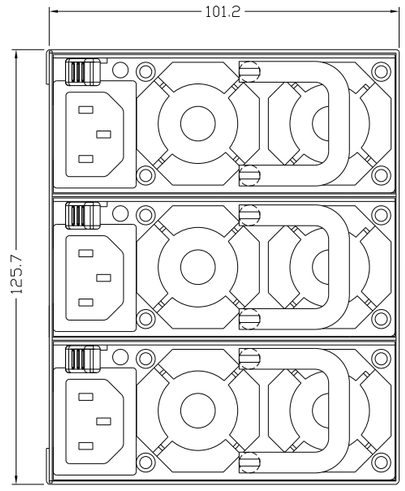

Note:
1.須符合S-TT-001 標準

ITEM	PART NO.	DESCRIPTION	QTY

MATERIAL	
FINISH	
COLOR	

TOLERANCES UNLESS NOTED	
0.0 ~ 5	± 0.1
5.0 ~ 20	± 0.2
20.0 ~ 50	± 0.3
50.0 ~ 200	± 0.4
200.0 ~	± 0.5
ANGLE	± 1°

REV.	T1
WEIGHT	
SCALE	1:1
UNIT	mm
THIRD ANGLE PROJECTION	

Tt ® *Thermaltake Technology Co., Ltd*

DRAWING NAME	TP-3UR820L1E		
PART NO.	WSPR0019		
DATE	APP.	CHK.	DRAW
2008/07/08			TIN

7 6 5 4 3 2 1

E D C B A